Triplex Reference

Disassemble
Pump Housing

1. Disconnect power to the pump motor. Relieve system pressure. Disconnect inlet and outlet hoses.
2. Remove the pressure switch cover and remove the two wire leads from the switch space connectors.
3. Remove the six screws from the upper housing.
4. Remove the upper housing from the check valve and diaphragm / lower housing assembles.

Check Valve Assembly

(To replace check valve only follow steps 1 through 6)

5. The check valve chamber and o-ring are located on the diaphragm / lower housing assembly.
6. Remove the check valve chamber subassembly from the diaphragm / lower housing subassembly (pull the valve chamber from the diaphragm).

Diaphragm / Cam / Lower Housing Assembly:

7. Remove the diaphragm / lower housing assembly from the motor from end bell adaptor.

Reassemble
Pressure Switch Assembly

1. Install the switch diaphragm into upper housing NOTE: Check the old diaphragm for material mark located in the center of the new diaphragms. V is for VITON, and E is for EPDM. Select the correct material for the installation.
2. Install the switch body over the diaphragm, align the screw holes and install the two mounting screws.
3. Reinstall the two wires onto the spade connectors, then install the switch cover and screw.

Check Valve Assembly

4. Install the o-ring into the o-ring groove located on the discharge side of the check assembly.
5. Install the check valve chamber assembly into the diaphragm, thus aligning the check valve chamber with the diaphragm seal walls (push in to secure the diaphragm).

Upper Housing Assembly

6. With the check valve chamber subassembly installed on the diaphragm, place the upper housing assembly onto the pre-assembled lower housing subassembly.
7. Lube the motor shaft with a small amount of light grease; align the cam with the motor "D" shaft and motor list, then slide the cam onto the motor shaft.
8. Check the discharge location (see arrow on front of port) for correct port orientation (discharge right is the standard position).
9. Install the six pump head screws through the upper housing, 3 screws will engage to lower housing. The other 3 screws will go through the lower housing into the front end bell assembly aligning the 3 pins on the front bell with the 3 holes on the lower housing and tighten securely.

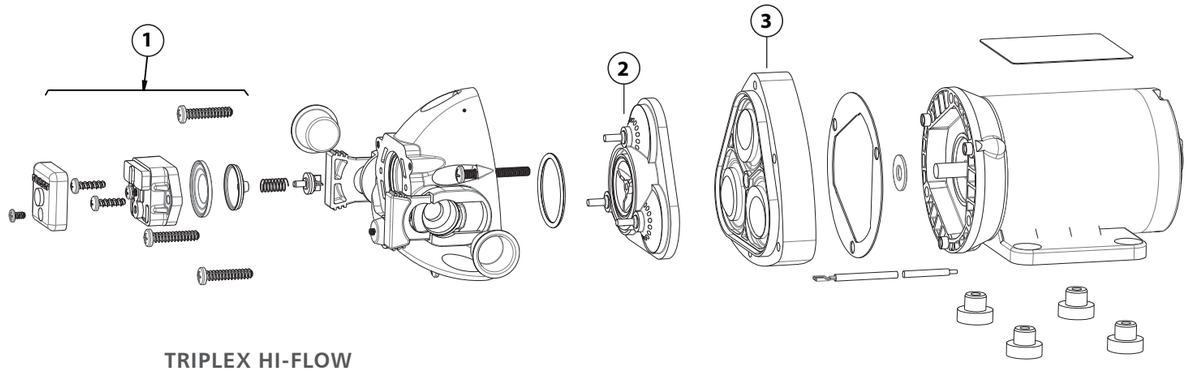

TRIPLEX HI-FLOW

PART NO.	PRESSURE SWITCH	CHECK VALVE	DIAPHRAGM
R3521139	02091060	20407021	21040643
R3521149	02091060	20407034	21040643
R3521339	02091060	20407021	21040643
R3521349	02091060	20407034	21040643

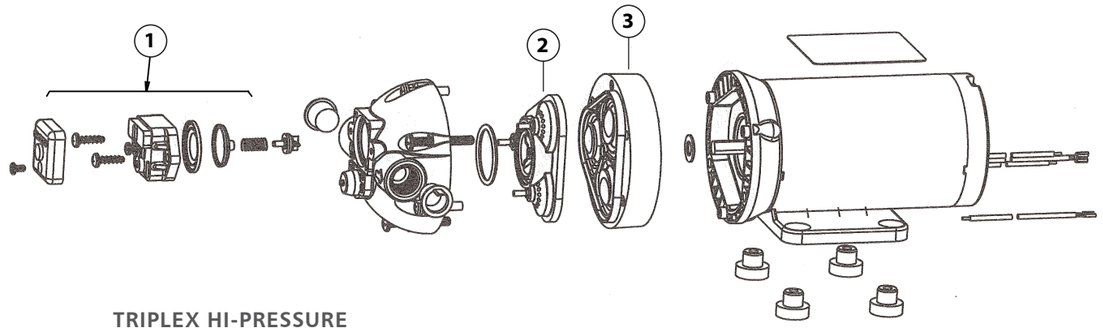

TRIPLEX HI-PRESSURE

PART NO.	PRESSURE SWITCH	CHECK VALVE	DIAPHRAGM
R3111500	NA	20407035	21040142A
R3111501	NA	20407035	21040142A
R3710242	02091100	20407035	21040142A
R3710502	02091100	20407035	21040142A
R3711132	02091100	20407033	21040142A
R3711142	02091100	20407035	21040142A
R3711232	02091100	20407033	21040142A
R3711242	02091100	20407035	21040142A
R3711332	02091100	20407033	21040142A
R3711342	02091100	20407035	21040142A
R3811132	02091150	20407033	21040142A
R3811142	02091150	20407035	21040142A
R3811232	02091150	20407033	21040142A
R3811242	02091150	20407035	21040142A
R3811332	02091150	20407033	21040142A
R3811342	02091150	20407035	21040142A
R3F14242	NA	20407035	21040142A

Troubleshooting for all products:

Pulsating Flow – Pump cycles on and off:

- Restricted pump delivery.
- Check discharge lines, fittings and valves for undersizing or clogging

Failure to Prime – Motor operates but no pump discharge

- Restricted intake or discharge line
- Air leak in intake line
- Punctured pump diaphragm
- Debris under flapper valves
- Crack in pump housing

Motor fails to turn on

- Loose wiring connection
- Pump circuit has no power
- Blown fuse / thermal protector tripped
- Pressure switch failure
- Defective motor

Pump fails to turn off after all valves are closed

- Empty tank
- Punctured pump diaphragm
- Discharge line leak
- Defective pressure switch
- Insufficient voltage to pump
- Debris under flapper valves

Low flow and pressure

- Air leak at pump intake
- Accumulation of debris inside pump and plumbing
- Worn pump bearing (excessive noise)
- Punctured pump diaphragm
- Defective motor

Pumps have thermal overload protected motors. The motor will automatically shut off if temperature rises due to an overload condition. If the motor shuts off in this manner, turn electrical power off and close all nozzles or valves. After a cooling off period the pump will automatically re-start.

Product Warranty:

ITT Flojet warrants products to be free of defects in material and/or workmanship for a period of one year after purchase by the customer from Flojet. During this one year warranty period, Flojet will at its option, at no charge to the customer, repair or replace this product if found defective, with a new or reconditioned product, but not to include costs of removal or installation. No product will be accepted without a return authorization number and COSSH sheet completed. All returned goods must be shipped with transportation charges prepaid. This is only a summary of our Limited Warranty. For a copy of our complete warranty, please request form no F100-101.